FAULHABER

Motion Control Systems

Series 3242…BX4 CS/CC
Series 3268…BX4 CS/CC
Series 3564…B CS/CC

Technical Manual

EN

WE CREATE MOTION

Imprint

Version:
3rd issue. 06.10.2011

Copyright
by Dr. Fritz Faulhaber GmbH & Co. KG
Daimlerstr. 23/25 · 71101 Schönaich

All rights reserved, including those to the translation. No part of this description may be duplicated, reproduced, stored in an information system or processed or transferred in any other form without prior express written permission of Dr. Fritz Faulhaber GmbH & Co. KG.

This technical manual has been prepared with care. Dr. Fritz Faulhaber GmbH & Co. KG cannot accept any liability for any errors in this technical manual or for the consequences of such errors. Equally, no liability can be accepted for direct or consequential damages resulting from improper use of the equipment.

The relevant regulations regarding safety engineering and interference suppression as well as the requirements specified in this technical manual are to be noted and followed when using the software.

Subject to change without notice.

The respective current version of this technical manual is available on FAULHABER's internet site:
www.faulhaber.com

Overview

This instruction manual contains instructions on how to install and use the FAULHABER Motion Control Systems (drives), Series 32xx…BX4 CS / CC and 3564…B CS / CC.

It is also necessary to use the communication and function manual for the commissioning, depending on the chosen interface option. Accordingly, reference is made here and elsewhere in this technical manual to the communication and function manual. Please note and follow the instructions given there.

Overview of the FAULHABER Motion Control Systems documents

Document	Content
Technical Manual	Device installation, safety, specification
Communication and function manual (RS232)	Initial start-up, function overview, protocol description, parameter description and notes on autonomous sequential programs
Communication and function manual (CANopen)	Initial start-up, function overview, protocol description and parameter description
Motion Manager instruction manual	Operation of the "FAULHABER Motion Manager" PC software for configuration and commissioning
Product data sheets	Technical limit and operating data

NOTE

The relevant communication and function manual is supplied, depending on the chosen option, on delivery of the drive.

The documentation is also available on request or on the FAULHABER internet page (www.faulhaber.com)

Table of Contents

1 Important Information 5

1.1 Symbols used in this technical manual 5
1.2 Safety instructions 6
1.3 Service/Maintenance 6
1.4 Troubleshooting 6

2 Description 7

2.1 General product description 7

3 Installation 9

3.1 Installation instructions 9
3.2 EMC compatible installation 11
3.3 Connections 12
3.3.1 Power supply 13
3.3.2 Analog input 13
3.3.3 Digital input 14
3.3.4 Fault output 14
3.3.5 Interfaces 15
3.4 Connection examples 16
3.4.1 Command source via potentiometer 16
3.4.2 Homing and limit switches 16
3.4.3 External incremental encoder 17
3.5 Communication connection 18
3.5.1 RS232 connection 18
3.5.2 CAN connection 19
3.6 Baud rate and node number/node ID 20

4 Operation 21

4.1 Device start up 21

5 EC Directives 22

6 Warranty 23

1 Important Information

This technical manual describes the handling and technical features of the following FAULHABER products:

Series 32xx…BX4 CS / CC and 3564…B CS / CC

The 32xx…BX4 CS/CC and 3564…B CS/CC series drives integrate a brushless DC servomotor of the 32xx…BX4 motor family with a high-resolution encoder and a motion controller in one complete drive unit.

- Please read the complete instruction manual and at least the quick guide and commissioning chapters in the communication and function manual before using the drive.
- Keep these instruction manuals in a safe place for later use.

The information given in this technical manual refers to the standard versions of the respective products. Please refer to any additional information sheet provided in the event of differences in information due to a requested product modification.

1.1 Symbols used in this technical manual

WARNING!

Warning!

This pictogram with the wording "Warning!" indicates an imminent danger which can result in physical injuries.

▶ *This arrow points out the appropriate action to take to prevent the imminent danger.*

CAUTION!

Caution!

This pictogram with the wording "Caution!" indicates an imminent danger which can result in slight physical injuries or material damage.

▶ *This arrow points out the appropriate precautions.*

REGULATION!

Regulations, guidelines and directives

This pictogram with the wording "Regulation" indicates a statutory regulation, guideline or directive which must be observed in the respective context of the text.

NOTE

Note

This "Note" pictogram provides tips and recommendations for use and handling of the component.

1 Important Information

1.2 Safety instructions

Observance of the following safety instructions is prerequisite for trouble-free and safe operation of the drive. Therefore, please carefully read through all the notes and follow them when using the drives.

Intended use

The FAULHABER Motion Control systems described here have been designed for controller operation of the integrated brushless motor. They have numerous functions and operating modes which enable flexible adjustment to the respective drive function.

Thanks to the compact design, the units can be integrated into diverse applications with minimal wiring. The flexible connection options open up a broad field of application in all areas, for example in decentralized automation technology systems, as well as in handling devices and machine tools.

The control parameters of the Motion Control systems can be individually adjusted to the respective application via a PC. The "FAULHABER Motion Manager" PC software for Microsoft Windows is available for commissioning and configuring the Motion Control systems and can be downloaded free of charge from the FAULHABER homepage www.faulhaber.com.

- The Motion Control systems contain electronic components and must be handled according to the ESD regulations.
- The Motion Control Systems may not be used in environments where contact with water, chemicals and/or dust is possible or in potentially explosive atmospheres.
- Please ask the manufacturer for information about possible product modifications for use in special ambient conditions.

1.3 Service / Maintenance

When used according to specification the devices are maintenance free for the operational lifetime of the device.

1.4 Troubleshooting

The device will not fail when used according to specification and the given instruction manuals. Should a failure occur please contact the manufacturer.

Telephone: +49(0)7031/638-0

E-Mail: info@faulhaber.de

Internet: www.faulhaber.com

2 Description

2.1 General product description

Product information

… … … 024 … C …

S:	Serial RS232 interface
C:	CAN interface
C:	Controller
BX4:	Motor family (brushless 4 pole technology)
B:	Motor family (brushless 2 pole technology)
024:	Supply voltage of the motor 24 V
G:	Shaft diameter 5 mm
K:	Shaft diameter 4 mm
42:	Motor length 42 mm
64:	Motor length 64 mm
68:	Motor length 68 mm
32:	Motor diameter 32 mm
35:	Motor diameter 35 mm

The drives integrate a brushless DC servomotor, a high-resolution encoder and a programmable position and speed controller, based on a high performance digital signal processor (DSP), within a complete drive unit.

Configuration example: 3268…BX4 CS / CC

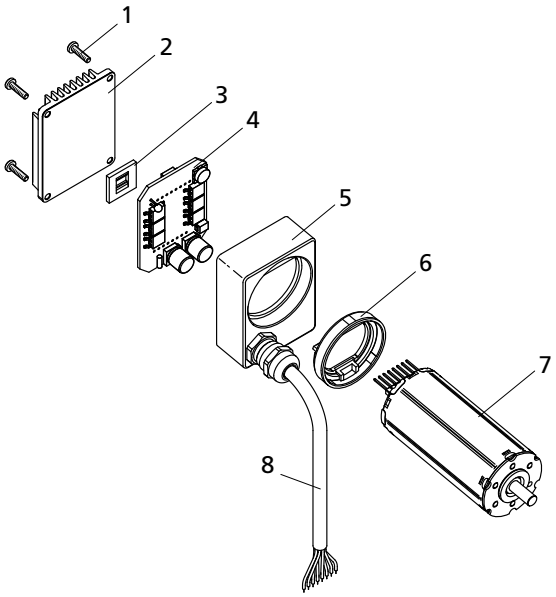

1 Fixing screws
2 Heat sink / Cover
3 Heat transfer pad
4 Motion Controller with power output stage
5 Housing
6 Insulation ring
7 Brushless DC servomotor
8 Connection cable

2 Description

2.1 General product description

The drives are designed for different drive tasks, which can be configured via the respective communication interface.

Depending on the version, the following tasks can be performed:

- Position control with analog or digital command source.
- Velocity control with analog or digital command source.
- Acquisition of reference marks and limit switches.
- Enhanced operating modes such as step motor mode, electronic gear, voltage controller mode or current control with analog current preset.
- Execution of sequential programs stored in the controller (in RS232 version only).

Various inputs and outputs are available for implementation of these functions:

- **Analog input**

  For use as:
  - Command source via analog or PWM signal
  - Digital input for reference marks and limit switches
  - Pulse input
  - Incremental encoder connection
- **Error output**

  For use as:
  - Digital output
  - Pulse output
  - Digital input for reference marks and limit switches
  - Rotational direction input
- 1 additional **digital input**

  For use as:
  - Digital input for reference marks and limit switches
- **Communication interface**

  Depending on the version, designed as serial RS232 or CAN interface for linking to PC or control

The chosen configuration can be permanently saved.

NOTE

Communication interface

Drives with RS232 interface can also be operated independently of the communication interface, if a function or sequential program without digital command control was programmed beforehand.

NOTE

Options

As an option, the power supply for the motor and electronics can be offered with separate connections (important for safety-relevant applications). In this case the 3rd input is not required.

Special preconfiguration of modes and parameters is possible on request.

NOTE

The Motion Manager software can be downloaded free of charge from www.faulhaber.com/MotionManager.

3 Installation

3.1 Installation instructions

CAUTION!

Damage due to incorrect assembly!

Incorrect assembly or assembly using improper mounting materials or methods can cause damage to the drives.

▶ *Observe the following installation instructions.*

Trained Personnel

This device is for use by trained personnel with knowledge of the relevant standards and regulations such as the **EMC Directive, Low Voltage Directive, Machinery Directive, VDE regulations (such as DIN VDE 0100, DIN VDE 0113/EN 0204, DIN VDE 0160/EN 50178)**, Accident Prevention Regulations may install and commission the units. This description must be carefully read and heeded prior to commissioning.

Please also note and follow the supplementary installation instructions in section 5 “EC Directives”.

Use environment

Depending on its use, the drives can get very hot. The unit should be installed in a clean, dry environment with access to ventilation. On installation, ensure that air can flow around the drive without obstruction. The rear attachment with heat sink in particular may not be covered.

The units are intended for indoor operation. Large amounts of dust and high concentrations of chemical pollutants must be avoided.

Cooling of the unit must be guaranteed, especially when installing in secondary housings or boxes. Ensure unobstructed ventilation.

Perfect functioning is only guaranteed if the supply voltage lies within the defined tolerance ranges.

WARNING!

Risk of burns!

As the unit operates with surface cooling, temperatures of up to 100 °C can occur.

▶ *Attach a touch guard or warning notice in the immediate vicinity of the motor.*

Shaft load

Parts may only be pressed onto the motor shaft if the maximum allowable load values are taken into account according to the respective product data sheet.

3 Installation

3.1 Installation instructions

Mounting flange

The drives may only be fixed by means of the threaded holes provided in the front flange. The maximum length of the fixing screws must be noted and observed as otherwise the motor will be destroyed. The indicated screwing depth may not be exceeded.

CAUTION! ***Risk of damage!***

If the drives are installed on the mounting flange, the mounting flange can be damaged by high radial loads or stresses on the drives or by screws tightened with excessive torque.

- *Do not load the drives at the rear end with a radial force greater than 30 N.*
- *Tighten the screws with maximum 50 Ncm. Note the strength of the screws and the maximum depth of engagement!*

Correct
The drive is fixed by the screws on the mounting flange.

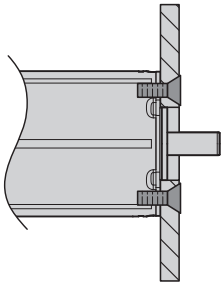

Incorrect
The drive is securely clamped to the attachment with a U-bolt.

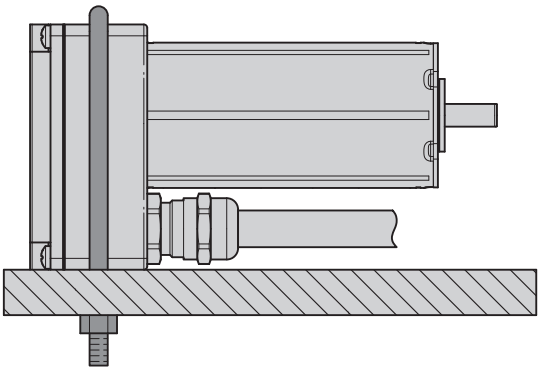

Electrical connection

It is necessary to ensure that the connection cable is laid without risk of damage during installation and operation, e.g. through chafing, squeezing or insufficient bending radii.

CAUTION! ***Risk of damage!***

Large static or dynamic loads can cause damage to the round cable.

- *The tensile force on the cable must not exceed 50 N. The limit for continuous tension is 25 N.*
- *The bending radii for one-off laying must be larger than 15 mm.*
- *If bending radii are <15 mm the cable may not be bent more than once.*
- *Suitable special types are available on request for frequent bending of the cable (e.g. dragline cable operation).*
- *The cable may not be bent at temperatures < -10 °C.*

3 Installation

3.1 Installation instructions

Power off during assembly

The drives must be disconnected from the power supply for all types of assembly and connection work, especially when making adjustments to the interface cables.

Shock loads

The noise emitted is increased and the life of the ball bearings and therefore of the motor becomes limited if they are exposed to impacts.

- The motor can still function if it is not exposed to higher shock loads than defined according to EN 60068-2-27.
- The motor may not be exposed to higher vibratory stresses than defined according to EN 60068-2-6.

NOTE

Service life

The full life is reached if the drives are not exposed to shock or vibration loads.

3.2 EMC compatible installation

CAUTION!

Length of the connection leads!

The maximum length of the connection leads is limited.

- ▶ *None of the connection leads, with the exception of the power supply, may exceed a length of 3 m.*

Optimisation of performance with respect to emission and immunity requires the additional EMC measures:

- Ensuring allowable emissions or necessary immunity in the industrial sector may require the use of an EMC filter and/or a shield or an EMC suppressor circuit.

3 Installation

3.3 Connections

The drives are equipped with an eight-core connection cable (AWG 24).

CAUTION! ***Electronic damage/ESD protection!***

Electrostatic discharges at the Motion Control system's connections can cause irreparable damage to the electronics.

▶ *Note and follow the ESD protective measures.*

Incorrect connection of the cores can cause damage to or destruction of the electronics.

▶ *Connect the connections in accordance with the connector pin assignment, see table.*

Please also note and follow the supplementary installation instructions in section 5 “EC Directives”.

32xx…BX4 CS und 3564…B CS

The connections are executed as coloured stranded wires and assigned as follows:

Wire colour	Designation	Meaning
blue	GND	GND
pink	U_B	Supply voltage
brown	AnIn	Analog input
white	Fault	Error output
grey	AGND	Analog GND
yellow	RxD	RS232 RxD
green	TxD	RS232 TxD
red	3.In	3rd input optional electronic supply U_B

32xx…BX4 CC und 3564…B CC

The connections are executed as coloured stranded wires and assigned as follows:

Wire colour	Designation	Meaning
blue	GND	GND
pink	U_B	Supply voltage
brown	AnIn	Analog input
white	Fault	Error output
grey	AGND	Analog GND
yellow	CAN_L	CAN_L
green	CAN_H	CAN_H
red	3.In	3rd input optional electronic supply U_B

3 Installation

3.3 Connections

3.3.1 Power supply

Supply connection

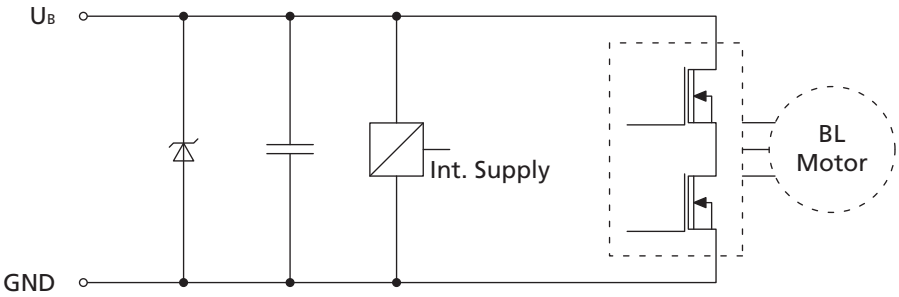

Wire colour	Designation	Meaning
blue	GND	GND
pink	U_B	Supply voltage of the motor 24 V

CAUTION! ***Power supply connections (+24 V, GND)***

Device malfunction can occur if the power supply is incorrectly dimensioned or connected. An internal fuse will protect the device from incorrect power polarity connection but must be replaced by the manufacturer after it has been triggered.

- *The power supply must be adequately dimensioned for the connected motor.*
- *Be sure to connect motor supply terminals with the correct polarity.*

3.3.2 Analog input

Internal protective circuit, analog input

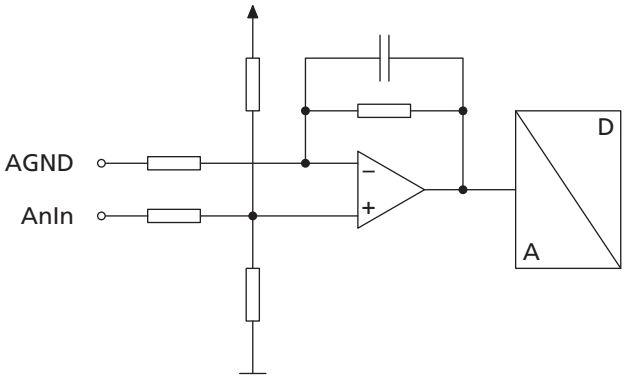

Wire colour	Designation	Meaning
brown	AnIn	Analog input
grey	AGND	Analog GND

3 Installation

3.3 Connections

The analog input is executed as a differential input. The analog GND should be connected to the power supply GND. This prevents the voltage drop in the supply cable from affecting the target velocity value.

The analog input has various uses, depending on the option and configuration: (see communication manual)

- Presetting of target velocity value via analog voltage
- Presetting of target velocity value via PWM signal
- Current limitation value via analog voltage
- Presetting of target position via analog voltage
- Digital input for reference and limit switches
- Connection for an external encoder (analog input to GND: Channel A/Analog GND to GND: Channel B) in gearing or BL encoder mode.

3.3.3 Digital input

Internal protective circuit, 3rd input

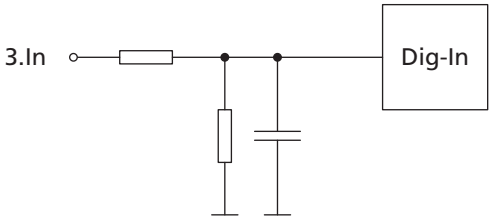

Wire colour	Designation	Meaning
red	3.In	3rd input optional electronic supply U_B

This connection can be used as reference or digital input. As an option, the drives can be modified by the manufacturer to serve as a separate connection for the supply voltage to the electronics allowing the motor to be disabled independently of the electronics.

3.3.4 Fault output

Internal protection circuit Fault (Dig I/O)

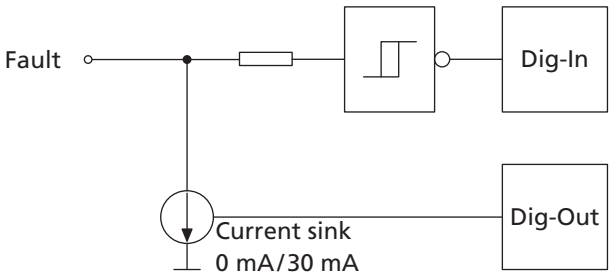

Wire colour	Designation	Meaning
white	Fault	Error output

The fault output is configured as an output in the factory. Before connecting as an input, the fault pin must have been configured accordingly. The configuration must be saved (see communication and function manual/commissioning chapter).

The error output is characterised by the following characteristics:

- Circuit that switches to GND (Open Collector)
- Output resistance in open state (High Level): 100 kΩ
- The circuit is open in the event of error (High Level)
- Output current limited to approx. 30 mA, voltage in open state must not exceed the supply voltage (maximum U_B)
- Short-circuit proof

Depending on the option, the Fault error output connection can also be configured for other functions:

- Pulse output
- Digital output (freely programmable)
- Homing or digital input
- Rotational direction input

3.3.5 Interfaces

RS232

The RS232 wiring is established via the connections RxD, TxD and the supply GND. The installed RS232 interface allows direct connection with a higher level control.

Wire colour	Designation	Meaning
blue	GND	GND
yellow	RxD	RS232 RxD
green	TxD	RS232 TxD

CAN

The CAN wiring is established using the CAN_H and CAN_L connections and the supply GND.

Wire colour	Designation	Meaning
blue	GND	GND
yellow	CAN_L	CAN_L
green	CAN_H	CAN_H

3 Installation

3.4 Connection examples

3.4.1 Command source via potentiometer

Bipolar analog command source via potentiometer

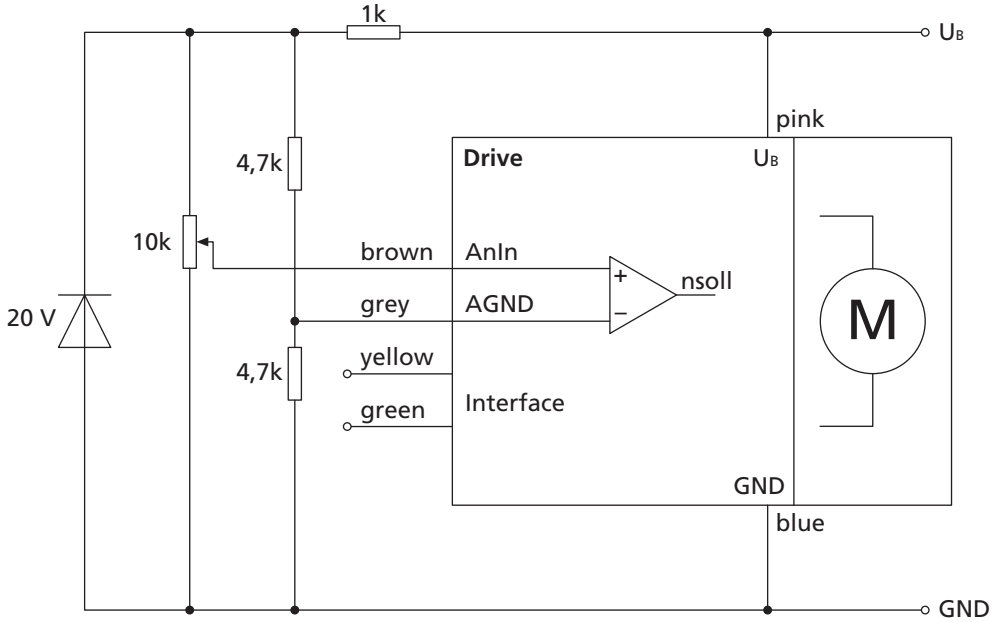

3.4.2 Homing and limit switches

Connection of homing and limit switches

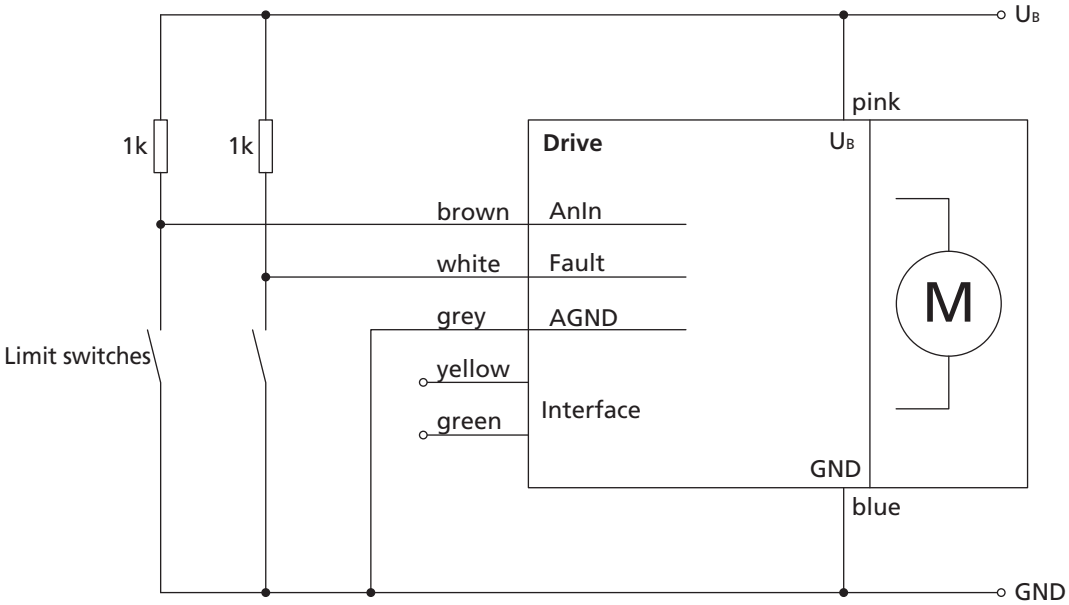

3 Installation

3.4 Connection examples

3.4.3 External incremental encoder

Connection of an external encoder

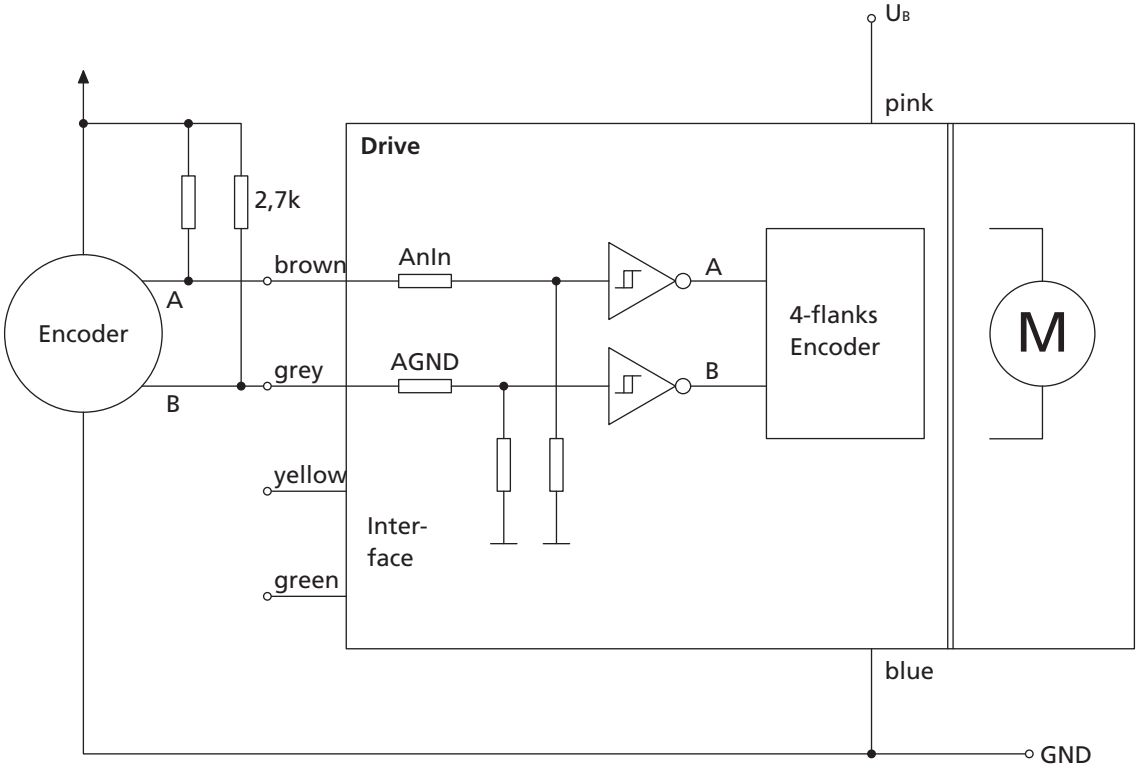

3 Installation

3.5 Communication connection

3.5.1 RS232 connection

The drives can be directly connected to a PC or a higher level control using transposed transmission and reception cables. This corresponds to implementation with a null modem cable.

Wiring between PC / control and a drive

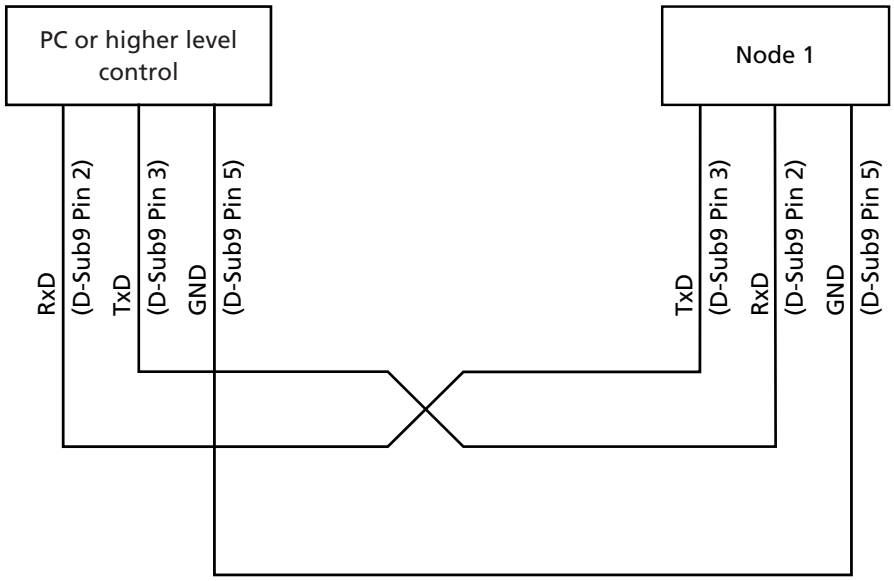

Wiring with several Motion Control systems in RS232 network mode

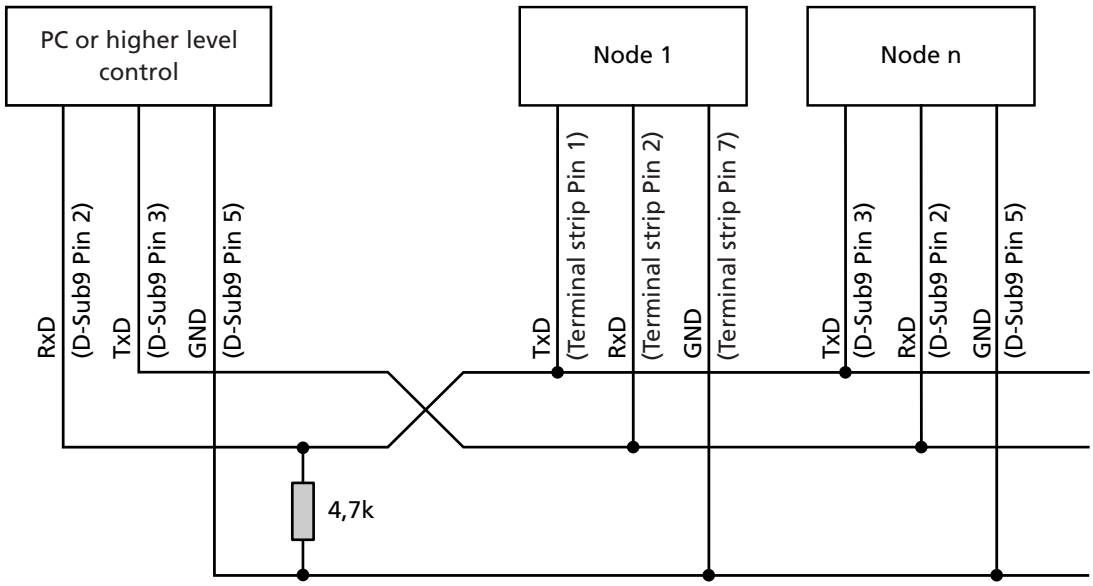

3 Installation

3.5 Communication connection

3.5.2 CAN connection

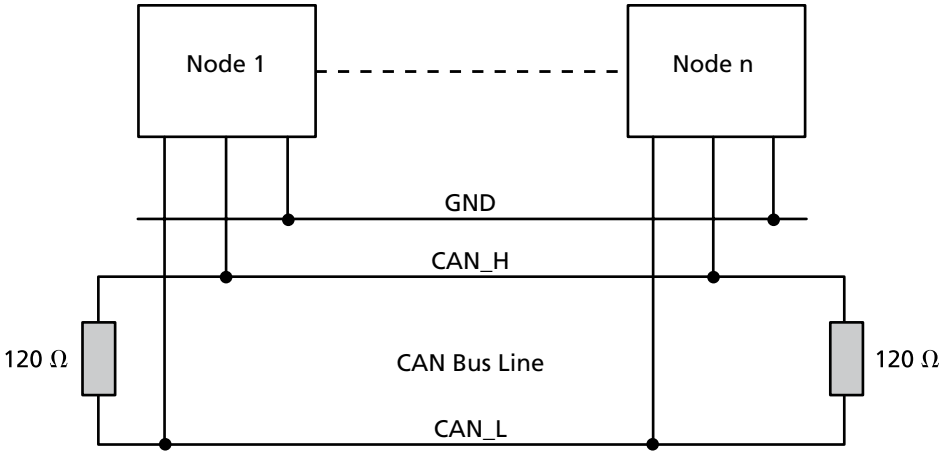

CAN is a bus system, to which all nodes are connected in parallel. A terminal resistance of 120 Ω must be connected to each end of the bus line.

In addition to the two signal lines CAN_H and CAN_L, the nodes must also be connected to each other by a common GND line.

In CAN systems the maximum cable length depends on the transmission rate chosen:

Baud rate	Max. line length (incl. stub)
1 000 kBit/s	25 m
500 kBit/s	100 m
250 kBit/s	250 m
125 kBit/s	500 m
50 kBit/s	1 000 m
20 kBit/s	2 500 m
10 kBit/s	5 000 m

3 Installation

3.6 Baud rate and node number / node ID

NOTE

The baud rate and node number necessary for the communication link are set via the Motion Manager or as a direct command input. Please read the relevant function and communication manual and the Motion Manager's instruction manual.

4 Operation

4.1 Device start up

To commission the drives, please read the “Quick Guide and Commissioning” chapter in the communication and function manual.

Before starting up a drive the following points must be checked:

- The drive has been installed according to the specifications.
- The connection cables on the supply side are connected according to the requirements (risk of polarity reversal!) and are laid so that they cannot be damaged during operation. The maximum load values must be noted and observed. (See section 3 “Installation”).
- Terminals and connectors are protected against ESD.
- The power supply unit is designed according to the requirements.

CAUTION! ***Power supply!***

Due to the PWM of the power output stage the motor current is always larger or equal to the current that can be measured at the supply connection U_{mot}. The current information (continuous/peak current) in the data sheets and the adjustable parameters of the I^2t current limiting refer to the motor current and not to the supply current of the Motion Controller!

CAUTION! ***Risk of injuries!***

A risk of injuries can result from protruding rotating or moving parts of the driven mechanism.

▶ *Cover rotating and moving parts with appropriate devices.*

CAUTION! ***Risk of injuries!***

Depending on the load and ambient temperature, very high temperatures can occur on the surface of the unit.

▶ *Contact protection (guards) must be provided if necessary.*

5 EC Directives

REGULATION! The following EC Directives are important for users of the described products:

§

Machinery Directive (2006/42/EC):

Due to their small size, small standard electrical drives cannot cause any noteworthy risk of injuries to people.

Therefore, the Machinery Directive does not apply to our products.

The products described here are not “part machines” or “incomplete machines”.

Therefore, Faulhaber does not provide a standard Declaration of Incorporation.

Low-Voltage Directive (2006/95/EC):

It applies to all electrical equipment with a nominal voltage from 75 to 1 500 V DC, or from 50 to 1 000 V AC. The products described in this instruction manual do not fall within the scope of this Directive as they are designed for smaller voltages.

EMC Directive (2004/108/EC):

The Electromagnetic Compatibility (EMC) Directive applies to all electronic and electrical equipment, plant and systems sold to end users (consumers). In addition, CE marking can be undertaken for built-in components according to the EMC Directive. Compliance is documented by the Declaration of Conformity.

6 Warranty

Extract from our warranty conditions

Dr. Fritz Faulhaber GmbH & Co. KG products are produced to state of the art production methods and are subject to strict quality control.

Should, contrary to all expectations, defects occur, we undertake to find a remedy within the warranty period.

- We shall make good or replace defective goods, at our own discretion, within a reasonable period set by you and at our own cost. Replaced goods become our property and are to be returned to us.
- If improvement or replacement delivery is not possible or does not occur or fails for other reasons for which we are responsible within a period determined by you, you can opt to withdraw from the contract for the defective delivery or reduce the purchase price.
- We are not liable for damage to the goods caused by natural wear and tear, wear, unsuitable, improper or non-contractual use, incorrect assembly, installation or putting into service, excessive loading or improper change, improvement or repair work by you or third parties or incorrect or negligent treatment, provided these are not through our fault.
- Further claims, in particular claims for compensation instead of the performance and for compensation of other direct or indirect losses – including accompanying or consequential loss, for whatever legal reason – are excluded. This does not apply if

  a)we are maliciously silent with regard to a legal or material defect or have issued a guarantee for the nature of the goods,

  b)the loss is due to deliberate intent or gross negligence by us, our legal representatives or vicarious agents or are based on negligent breach of fundamental contract obligations by these persons, or

  c)culpable violation of duty by us, our legal representatives or vicarious agents which have resulted in physical injuries or damage to health.

  In the case of simple negligence, however, our obligation to pay damages is limited to the amount of typical, foreseeable losses for the type of contract.
- All defect claims including the claims for compensation covered by our terms and conditions of supply expire one year after delivery of the goods to your. The limitation period for replacements and improvements is 1 year but it expires at least when the original limitation period for the delivered object expires. The period for defects liability for a supplied object will be extended by the duration of the operational interruption caused by the making good work. Provisions concerning a shorter life of the object supplied within the scope of its intended use remain unaffected by this limitation provision.

For further information, please refer to our terms and conditions of supply, which we will pleased to make available on request.

FAULHABER

DR. FRITZ FAULHABER GMBH & CO. KG KG
Antriebssysteme

Daimlerstraße 23/25
71101 Schönaich · Germany
Tel. +49(0)7031/638-0
Fax +49(0)7031/638-100
info@faulhaber.de
www.faulhaber.com

MA05027 English, 3rd issue, 10.2011
© DR. FRITZ FAULHABER GMBH & CO. KG
Subject to change without notice